HF-Performer 254 TL5 HO EII 220-240V 50/60Hz

Description famille produit

Données produit	
Code commercial	910295 30
Code produit EOC	8711500910295 30
loccod	
Nom produit	HF-Performer 254 TL5 HO EII 220-240V 50/60Hz
Désignation	HF-P 254 TL5 HO EII 220-240V 50/60Hz
Type emballage	Unpacked
Pièces par pack	1
Config. Emballage	12
Packs par carton	12
Code barre produit	8711500910295
EAN 2	
Code barre carton regroup.	8711500910301
Code usine	9137 006 13666
Code ILCOS	
Poids net unitaire	0.270 KG
Remplaçant	
Rated Number of Lamps	2piece
Rated Ballast-Lamp Power	54
Rated Lamptype	TL5 HO
Application code	EII
Line Voltage	220-240V
Line Frequency	50/60Hz
Energy Efficiency Index	A2

HF-P

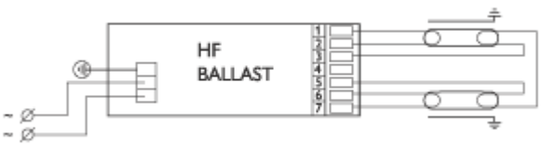

HF-P 2

asimpleswitch.com

TECHNOLOGY

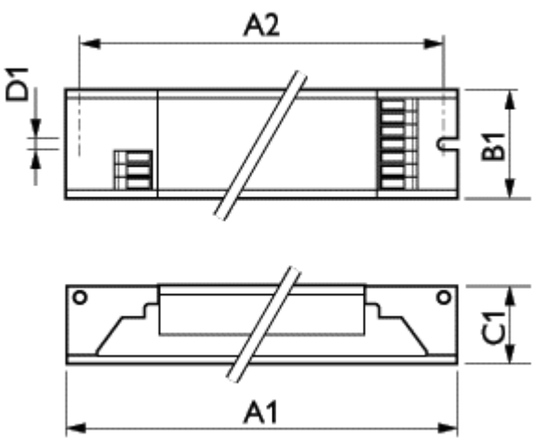

HF-P 2

PHILIPS

	A1	A1	A1	A2	A2	A2
Nom produit	Nom	Nom	Nom	Nom	Nom	Nom
HF-Performer 254 TL5 HO EII 220-240V 50/60 Hz	360.0	360.0	360.0	350.0	350.0	350.0

	B1	B1	B1	C1	C1	C1
Nom produit	Nom	Nom	Nom	Nom	Nom	Nom
HF-Performer 254 TL5 HO EII 220-240V 50/60 Hz	30.0	30.0	30.0	22.0	22.0	22.0

	D1	D1	D1
Nom produit	Nom	Nom	Nom
HF-Performer 254 TL5 HO EII 220-240V 50/60Hz	4.2	4.2	4.2

©2009 Koninklijke Philips Electronics N.V.
All rights reserved. Reproduction in whole or in part is prohibited without the prior written consent of the copyright owner. The information presented in this document does not form part of any quotation or contract, is believed to be accurate and reliable and may be changed without notice. No liablity will be accepted by the publisher for any consequence of its use. Publication thereof does not convey nor imply any license under patent- or other industrial or intellectual property rights.
Document order number : 0000 000 00000